FC

for three phase alternating current, 6 pole

FC063-6D

Characteristic curve

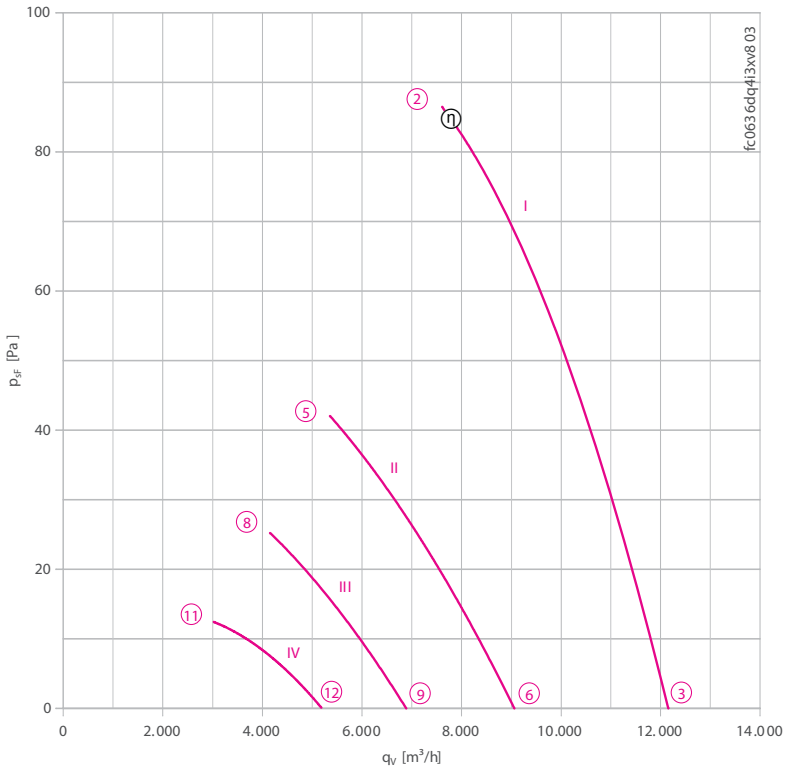

Measured in full bell mouth without guard grille in installation type A according to ISO 5801.

Description

Motor technology: AC
Rated voltage U_N: **3~ 230/400 V (Δ/Y) ±10 %***
Rated frequency f_N: **50 Hz***
Input power P_1: **0.59 kW***
Rated current I_N: **2.30/1.30 A***
Rated speed n_N: **890 min^{-1}***
Starting current I_A: 6.00 / 3.60 A
Current increase ΔI: 0 %
Thermal class: **THCL155***
Min. permitted ambient temperature $t_{R(min)}$: -40 °C
Max. permitted ambient temperature $t_{R(max)}$: 60 °C
Electrical connection: Terminal box
Number of blades: 7
Protection class: IP54
Motor protection: thermal contact
Blades: Aluminium, 1 coat paint, jet black
Rotor: Aluminium, 1 coat paint, jet black
Conformity: ErP 2015, CE
ErP-data
Efficiency η_{statA}: 32.2 %
Efficiency: N_{actual} = 40.1 / N_{target} = 40**
* Rated data
**ErP 2015

Connection diagram Page 192
1360-106XB

Dimensions mm

Airflow direction A

Design F - flange ring with two flanges, without guard grille

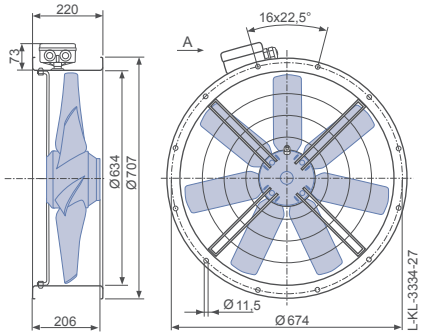

Design F - flange ring with two flanges, guard grille suction side

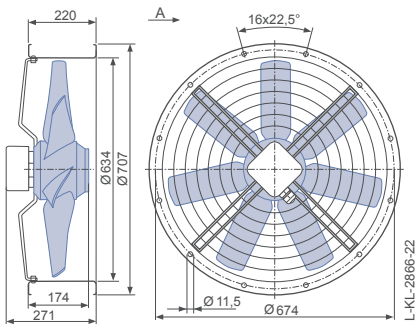

Design Q - square full bell mouth, guard grille suction side

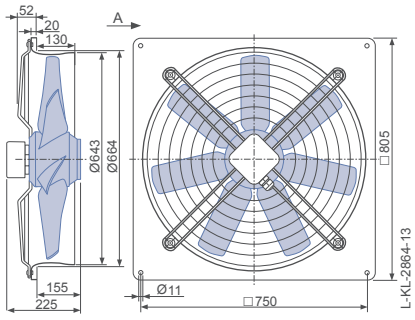

Performance data

Type	Characteristic curve	Voltage U V	Operating point	Current I A	Input power P_1 W	Speed n min^{-1}	Suction side sound power level L_{WA5} dB(A)
FC063-6D_.4I.A7	I	**400***	②	**1.30***	**590***	**890***	80
		400	③	1.20	510	910	80
	II	230	⑤	1.30	360	610	70
		230	⑥	1.25	340	680	73
	III	180	⑧	1.10	230	480	64
		180	⑨	1.10	230	520	66
	IV	140	⑪	0.90	140	360	57
		140	⑫	0.89	140	390	59

*rated data

Fan ordering information

Airflow direction A

Design	F (without guard grille)	F (guard grille suction side)	Q (guard grille suction side)
	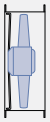	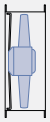	
Type **Article no.**	**FC063-6DF.4I.A7** **124983**	**FC063-6DF.4I.A7** **132353**	**FC063-6DQ.4I.A7** **130751**
Weight kg	19.40	20.30	24.00

Control technology

	Frequency inverter Fcontrol 3~	Motor protection units 3~	Electronic voltage controllers 3~
			

Connection diagrams
AC technology

104XA
For 1~-motor with capacitor and thermostatic switch (if built in).
Airflow direction: V
Direction of rotation: clockwise

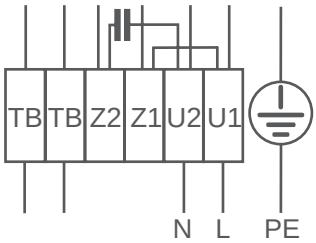

Cable colours:
U1 brown
U2 blue
Z1 black
Z2 orange
TB white

104XB
For 1~-motor with capacitor and thermostatic switch (if built in).
Airflow direction: A
Direction of rotation: counter clockwise

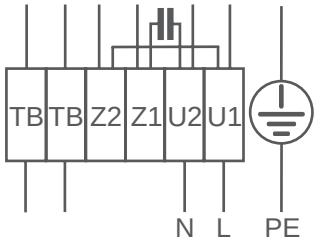

Cable colours:
U1 brown
U2 blue
Z1 black
Z2 orange
TB white

106XA
For 3~-motor with one speed and thermostatic switch (if built in).
Airflow direction: V
Direction of rotation: clockwise

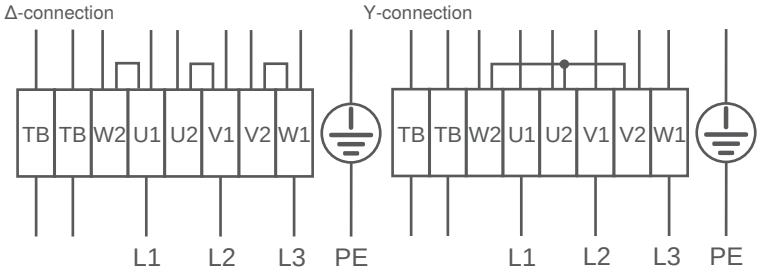

Cable colours:
U1 brown
V1 blue
W1 black
U2 red
V2 grey
W2 orange
TB white

106XB
For 3~-motor with one speed and thermostatic switch (if built in).
Airflow direction: A
Direction of rotation: clockwise

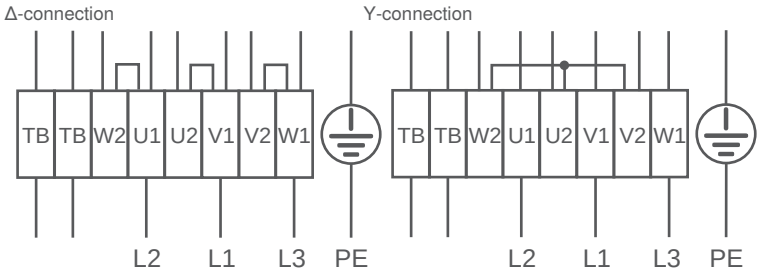

Cable colours:
U1 brown
V1 blue
W1 black
U2 red
V2 grey
W2 orange
TB white

108XA
For 3~-Motor with 2 speeds (Δ-/Y switch over) and thermostatic switch (if built in). Without bridge when using speed change-over switch.
Direction of air flow: V
Direction of rotation: Clockwise

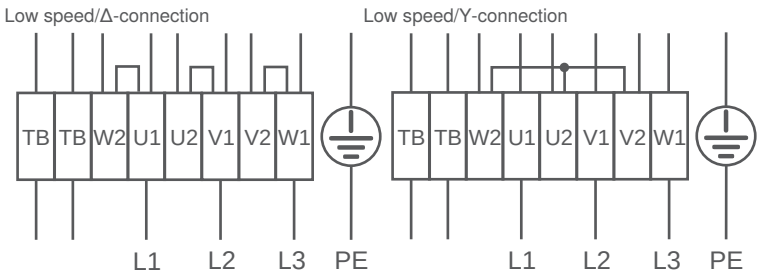

Cable colours:
U1 brown
V1 blue
W1 black
U2 red
V2 grey
W2 orange
TB white

108XB
For 3~ motor with 2 speeds (Δ-/Y switch over) and thermostatic switch (if built in). Without bridge when using speed change-over switch.
Direction of airflow: A
Direction of rotation: Counter clockwise

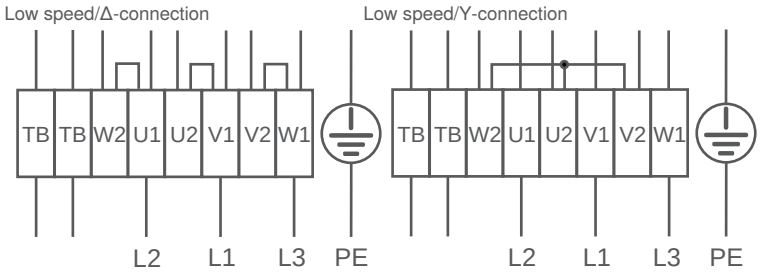

Cable colours:
U1 brown
V1 blue
W1 black
U2 red
V2 grey
W2 orange
TB white

177X

1~ Motor with condenser and thermostat switch.
FN Series
Airflow direction: A
Direction of rotation: Counter-clockwise rotation (looking at rotor)

FB Series
Airflow direction: A
Direction of rotation: clockwise rotation (looking at rotor)

Other speeds possible with capacitors connected in series.

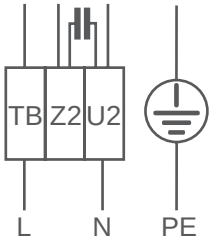

Cable colours:
U2 blue or grey
Z2 black
TB brown